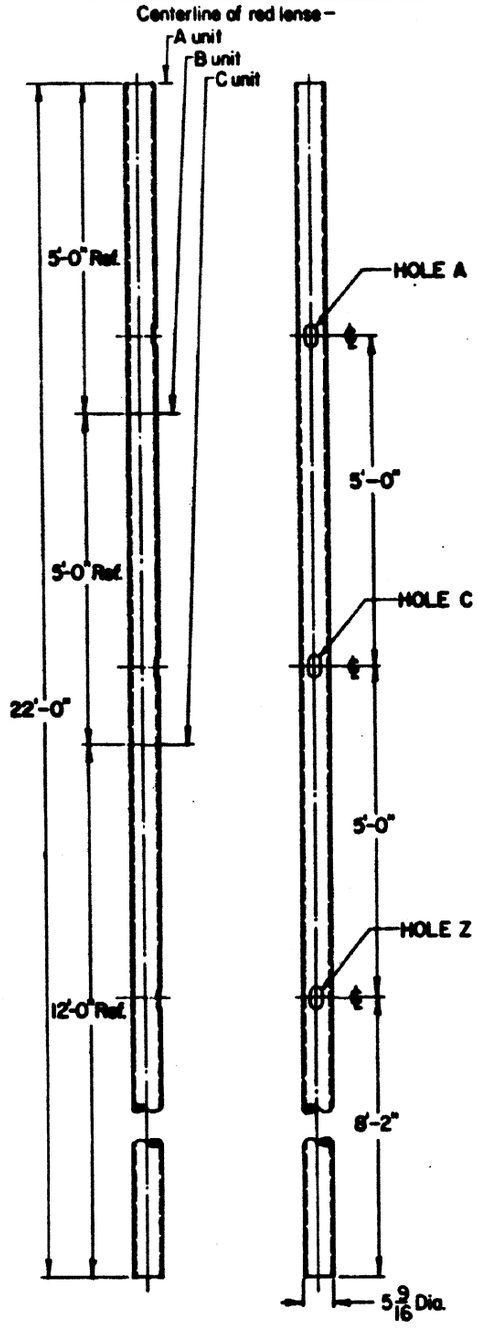

MAST 6025-1

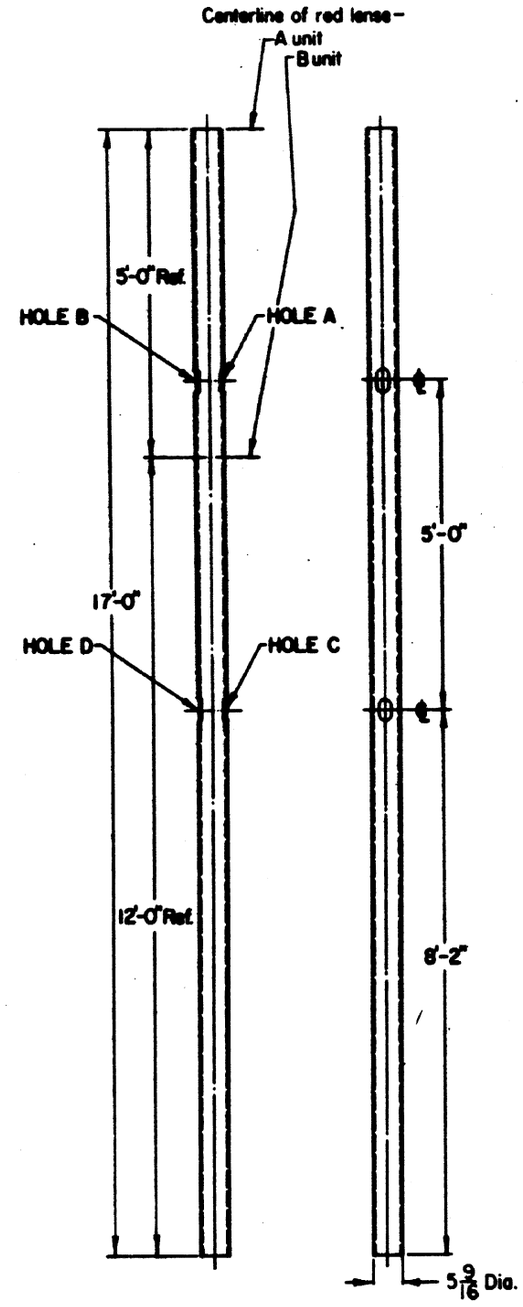

MAST- Order from table-see note 3

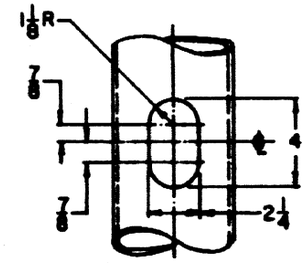

Detail of hole in mast for for cable entrance

TABLE FOR ORDERING SIGNAL MASTS

MAST NUMBER	DRILL HOLES MARKED:	ACCOUNT REFERENCE NUMBER	SINGLE FACED SIGNAL	BACK TO BACK SIGNAL	TOTA NUMB SIGNA UNIT
6025-1	A,C,&Z	02-295960	X		3
6025-10	A	02-295861	X		1
6025-11	A&C	02-295887	X		2
6025-20	A&B	02-295903		X	2
6025-21	A,B,&C	02-295929		X	3
6025-22	A,B,C,&D	02-295945		X	4

NOTES:

1. Fabricate masts from 6061-T6 aluminum alloy 5" diameter pipe, schedule 80 (0.375 wall).
2. Heating or welding any portion of masts during manufacture, erection, or maintenance is not permitted.
3. When ordering a mast, select from the table the mast with the correct number of cable outlet holes in single faced, or back to back arrangement.

SHEET 1

CONRAIL CS-6025

STANDARD

SIGNAL MASTS

FOR COLOR LIGHT SIGNALS

MAY 20, 1981

Approved Chief Engineer C&S

Printed in U.S.A.