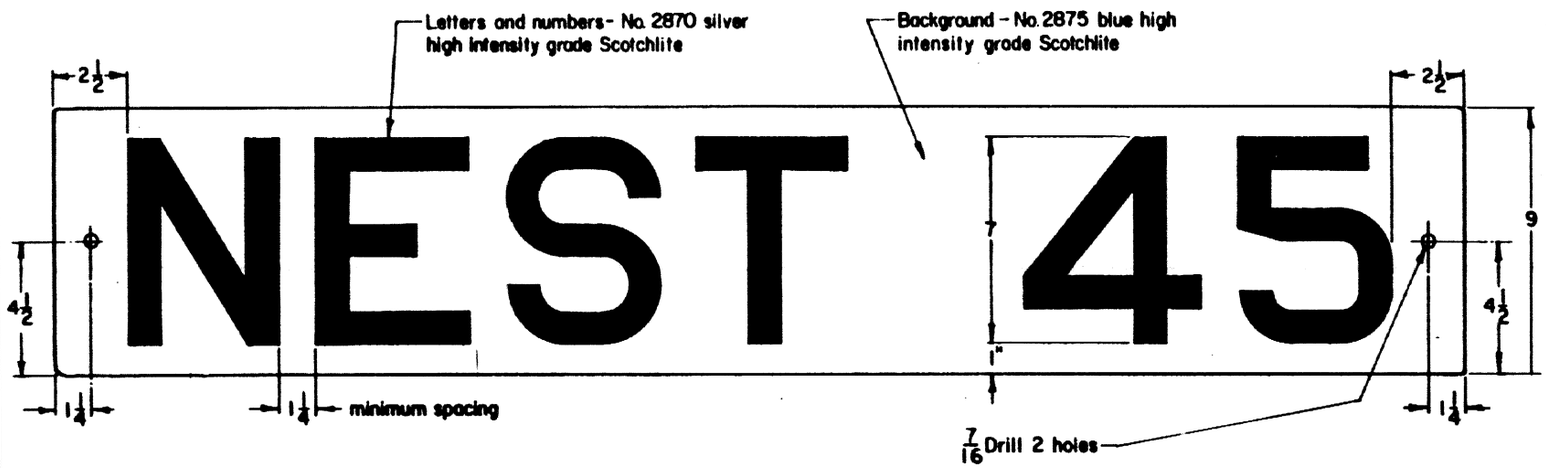

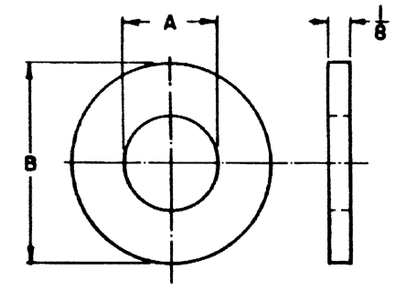

7000-50 NEOPRENE WASHER A=13/32 B=7/8 for 3/8 bolt
7000-50 NEOPRENE WASHER A=17/32 B=1 1/8 for 1/2 bolt

7000-15 CP LOCATION SIGN

When ordering, specify name and CP number required. The letters "CP" will not appear on sign. If sign is being re-ordered, give distance between centers of 7/16" diameter mounting holes.

Typical mounting of sign on relay house

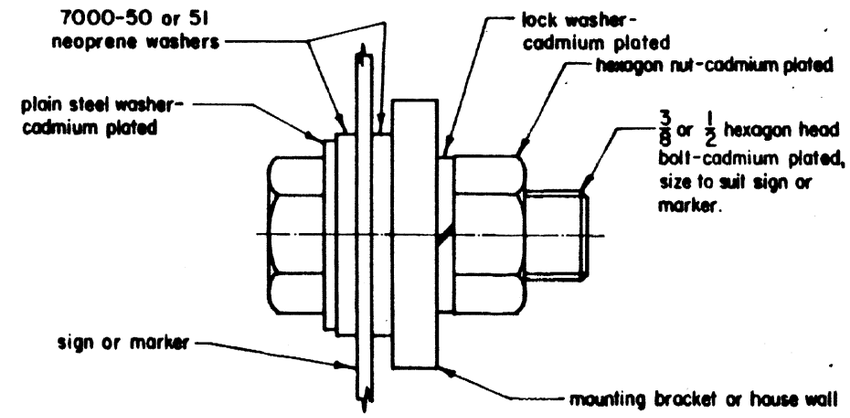

Typical method of mounting signs and markers faced with high intensity reflective material.

SEE NOTES ON SHEET 1

SHEET 9
CONT'D ON SH 10

CONRAIL

CS-7000-A

STANDARD
SIGNS AND MARKERS
SIGNS FOR CP LOCATIONS

MAY 18, 1981

Printed in U.S.A.