... 83 added collar details, base & cap to post, eliminated tapped holes & thread ed pipe cap on post changed station sign lengths from 39 inches.

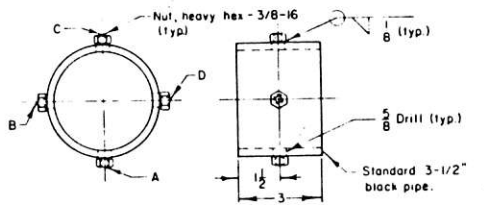

COLLAR

TABLE FOR COLLARS		
Item	Ref.	Drill holes & weld nuts at locations
12	74647	A, B, C, & D
13	74648	A, B, & C
14	74649	A & C

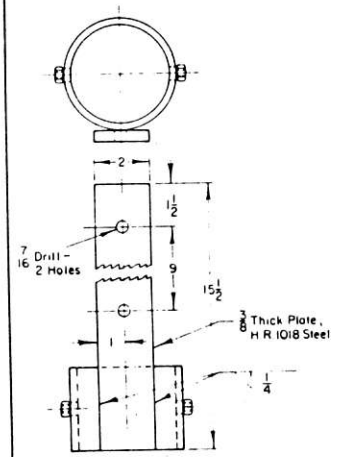

COLLAR—74649

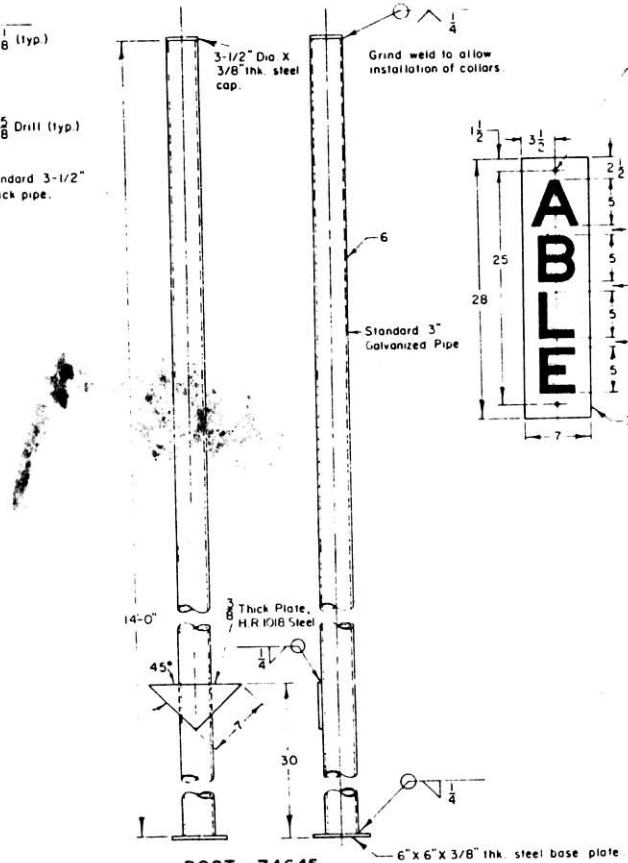

POST—74645

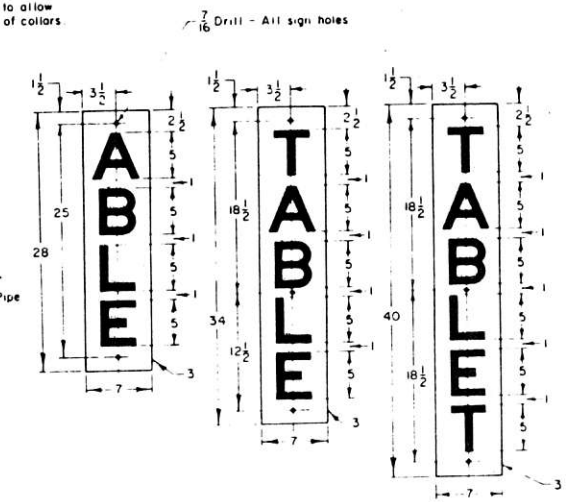

STATION SIGN—74642

Face entire plate with No 2875-blue high intensity reflective mat'l. Letters to be No 2870- silver high intensity reflective mat'l

See Notes On Sheet 1

SHEET 2

CONRAIL STANDARD

CS-7464-C

BLOCK LIMIT AND APPROACH BLOCK LIMIT SIGNALS

APR 2, 1982

Printed in U.S.A.