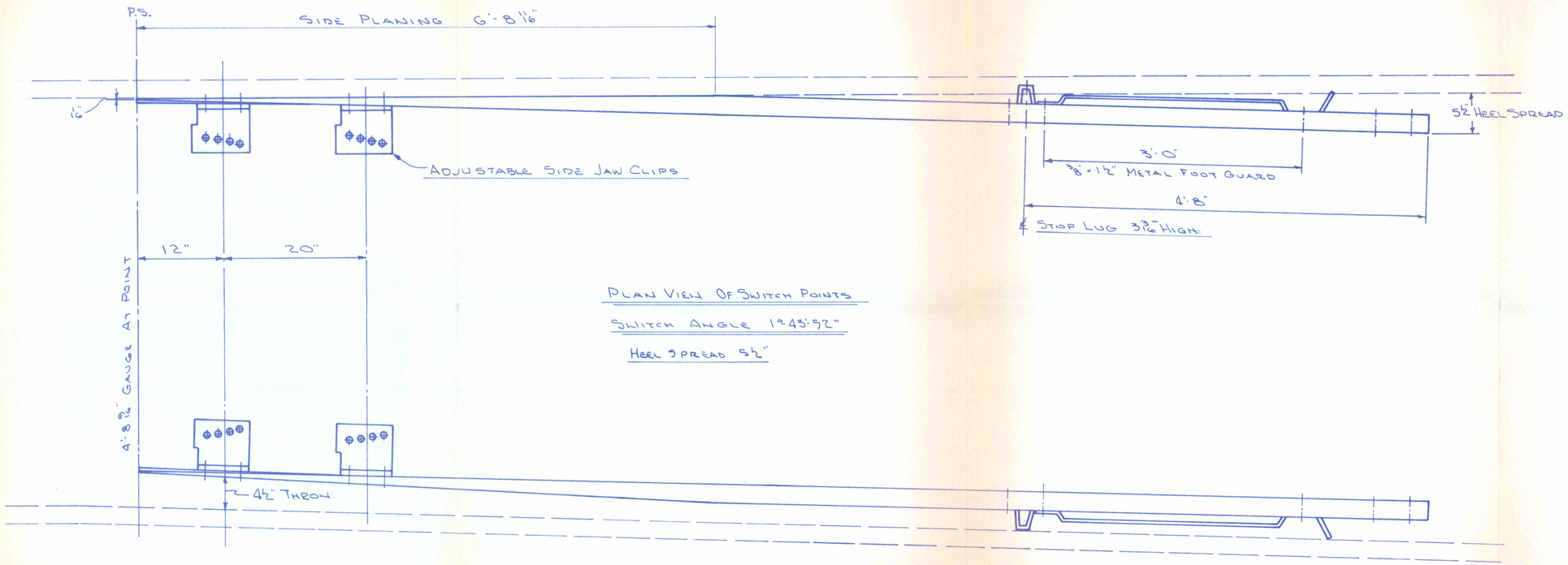

PLAN VIEW OF SWITCH POINTS

SWITCH ANGLE 1°43'-52"

HEEL SPREAD 5½"

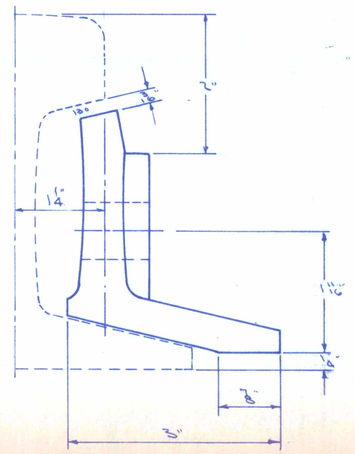

END VIEW OF 80"A SWITCH POINT

SCALE: FULL SIZE

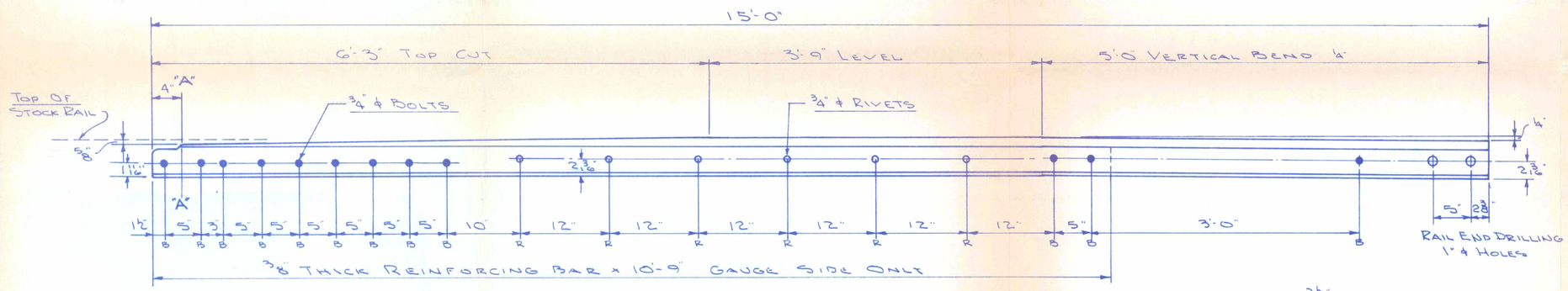

ELEVATION OF POINTS

SCALE: 1½" = 1'-0"

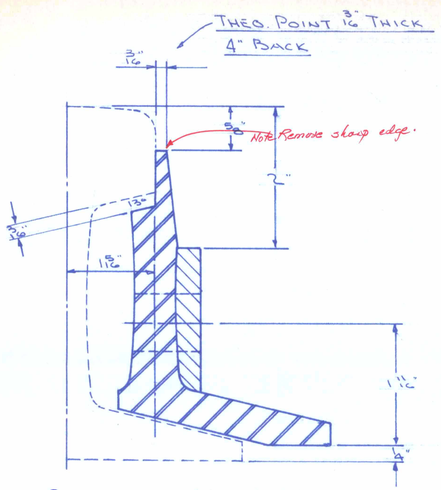

SECTION "A-A"

SCALE: FULL SIZE

FOOT GUARD 3/8" x 1½" BAR

SCALE: 2" = 1'-0"

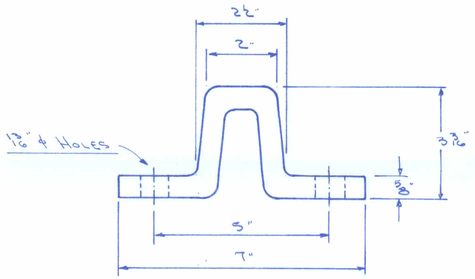

STOP LUG

3/8" x 1½" BAR

SCALE: HALF SIZE

APPROVED
J.P. Rainher HLK
NOV 2 1987

SCALE: AS NOTED

CUSTOMER'S P.O. # R43158-14205

MIDWEST ORDER #19559

3 PCS. REQ'D. RIGHT HAND — 3 PCS. REQ'D. LEFT HAND

REF: WABASH RAILWAY DRAWING – PLAN NO. 1016

REVISIONS			
NO.	DATE	BY	DESCRIPTION
1			
2			
3			
4			
5			

MIDWEST STEEL DIVISION
POMEROY, OHIO

DRAWN 10-19-87	BY FWK	TITLE 80"A SWITCH POINTS 15'-0" LONG 5½" HEEL SPREAD SINGLE REINFORCED FOR NORFOLK SOUTHERN CORP.	SHOP ORDER
DESIGNED			DRAWING B-756
CHECKED			
APPROVED			